# RAPIDCUT -6

## TECHNICAL FEATURES

POWER SUPPLY.....Filtered,lubricated air

CONSUMPTION.....3.78 Lt./cut at 6.5 bar

MAXIMUM ø CUT.....6ø (Steel up to 70 Kg./mm²)

4ø (Steel up to 180 Kg./mm²)

SPEED.....60 Cuts/minute

MAXIMUM PRESSURE.....8.5 bar

MINIMUM PRESSURE.....6 bar

WEIGHT.....3.2 Kg.

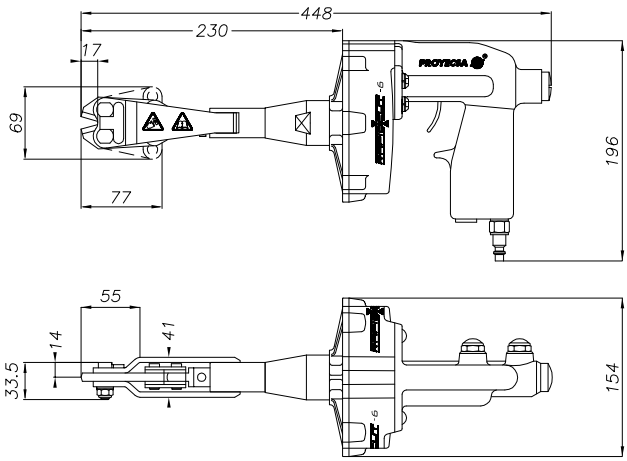


# RAPIDCUT -6L

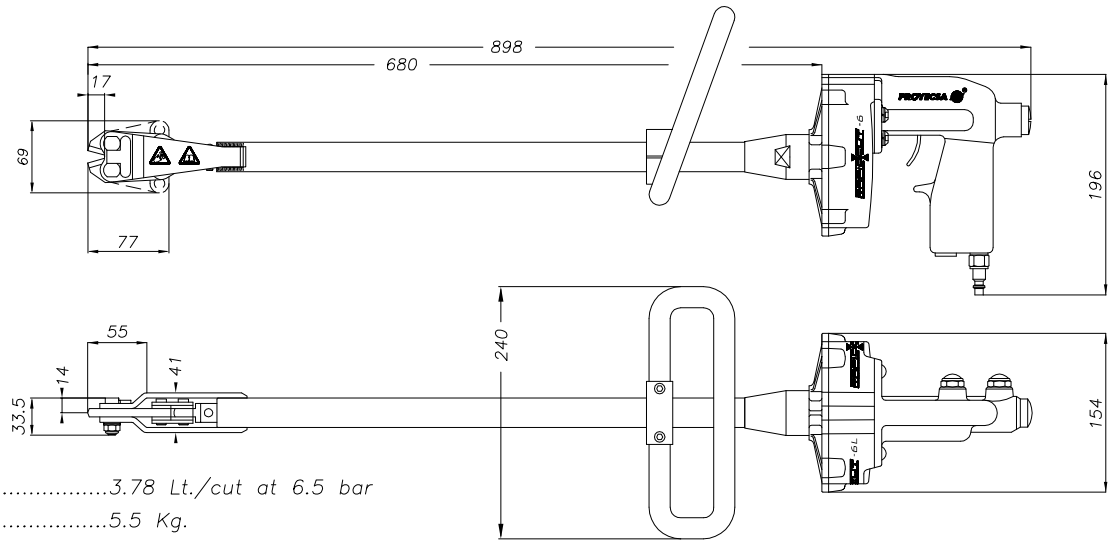


CONSUMPTION.....3.78 Lt./cut at 6.5 bar

WEIGHT.....5.5 Kg.

## APPROPIATE BLADES TYPE

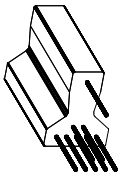

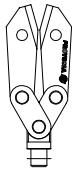

MAX. 4ø

ref. C80LAP

High tensile wire

Up to 180 Kg./mm²

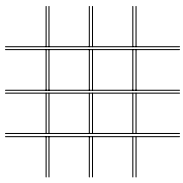

MAX. 6ø

ref. C80LAP

Rebar and wire mesh

Up to 70 Kg./mm²